ID-Nr. 30678-001

Model G90.205.060.2F

Dimensions	
Width (external)	598.00 mm
Depth (external)	615.00 mm
Height (external)	2050.00 mm
Width (internal)	477.00 mm
Depth (internal)	425.00 mm
Height (internal)	1858.00 mm

The available internal dimensions can vary depending on the interior equipment package.

Weight / Load	
Weight without interior equipment	365 kg
Distributed load	999.00 kg/m²
Maximum load	600 kg

Ventilation	
Extraction air	75 DN
Minimum exhaust air quantity 10 times	4 m³/h
Minimum exhaust air quantity 120 times	45 m³/h
Differential pressure (10 times air change EK5/AK4)	5 Pa
Differential pressure (120 times air change EK5/AK4)	76 Pa

For further details of the lead-through possibilities and exhaust air please have a closer look to EN 14470-2.

Colouring / Surface finish	
Body colour code	RAL 7035
Body colour	light grey
Body surface finish	plain
Door / Drawer colour code	RAL 7035
Door / Drawer colour	light grey
Door / Drawer surface finish	plain

General Information	
Number of doors	1
Door opening angle	180.00°
Depth with open doors	1135 mm
x 50-litre gas cylinders	2 piece
Customs tariff number	94032080

Gas cylinder cabinet G-ULTIMATE-90
Model G90.205.060.2F, light grey (RAL 7035)

Safe and approved storage of flammable or toxic gases in working areas – for up to 2 x 50-litre gas cylinders

Function / construction:

- **No unauthorised use:** door lockable with profile cylinder (integration in an existing locking system possible)
- **Easy alignment:** adjusting aids to compensate for uneven floor
- **Easy mounting of connecting pipes and gas fittings:** large interior height (1890 mm), many lead-through possibilities on the top of the cabinet
- **Ventilation:** integrated air ducts ready for connection (DN 75) to a technical exhaust, even ventilation inside the cabinet
- **Tested and certified:** according to the stricter GS principles

Available equipment:

- Standard interior equipment – complete with mounting rails, rolling ramp and cylinder retainer

Front view

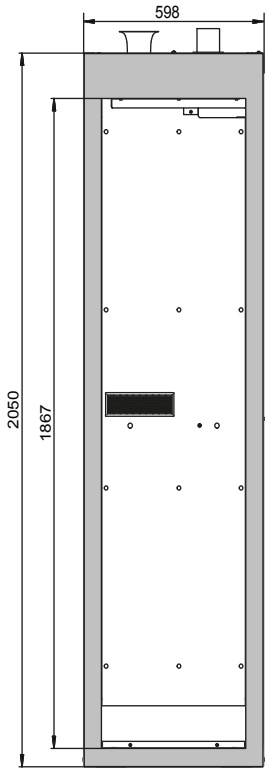

Side view

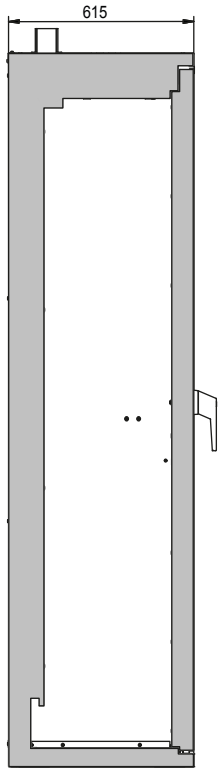
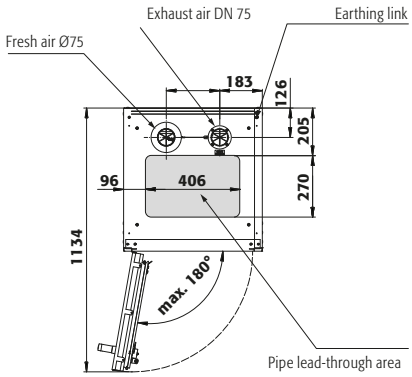
Top view